Introduction to

Heavy Ion Radiation Simulation

NovaTCAD

20 years ANNIVERSARY

CROSSLIGHT

Heavy Ion Radiation

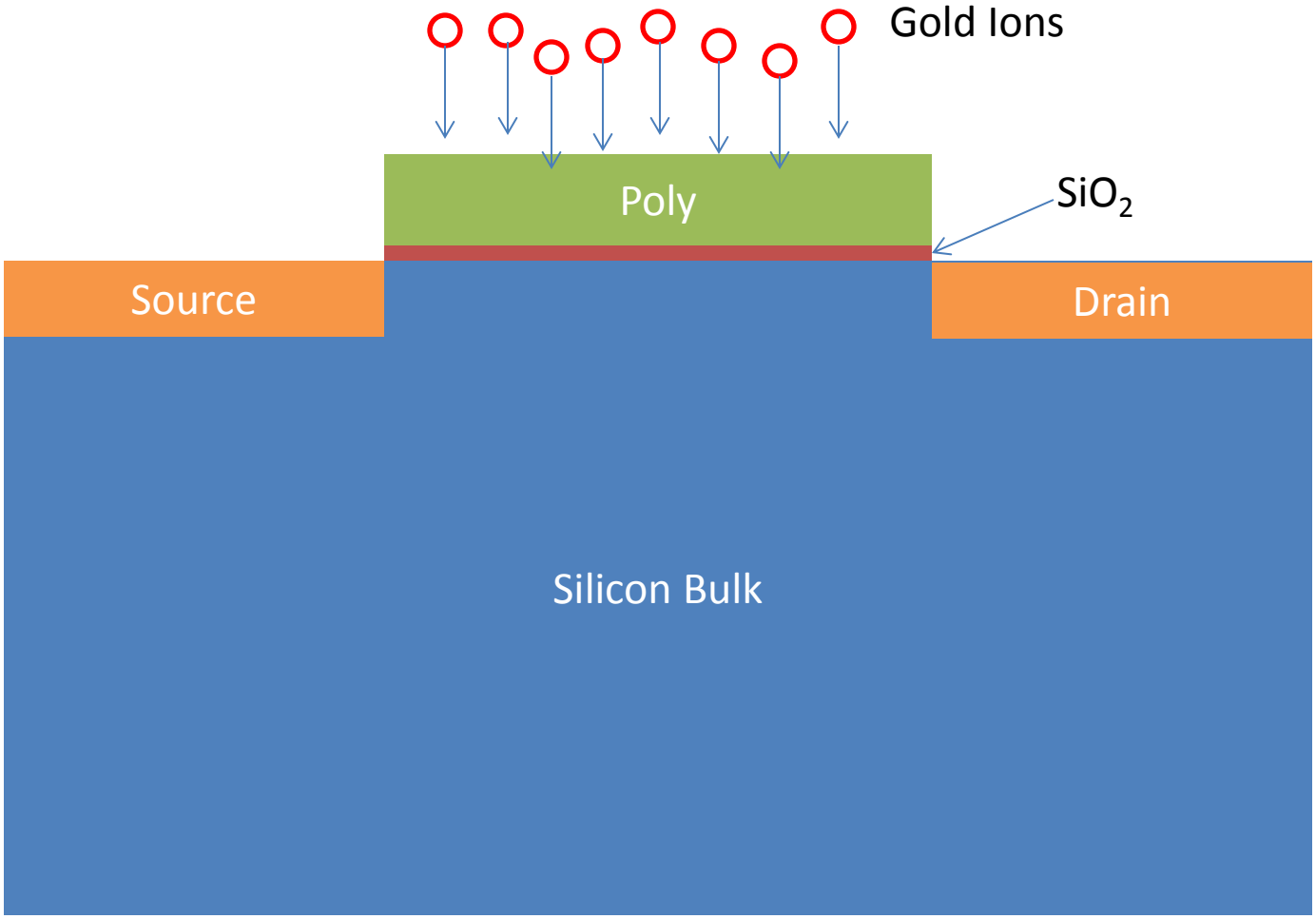

NovaTCAD

Simulated Structure

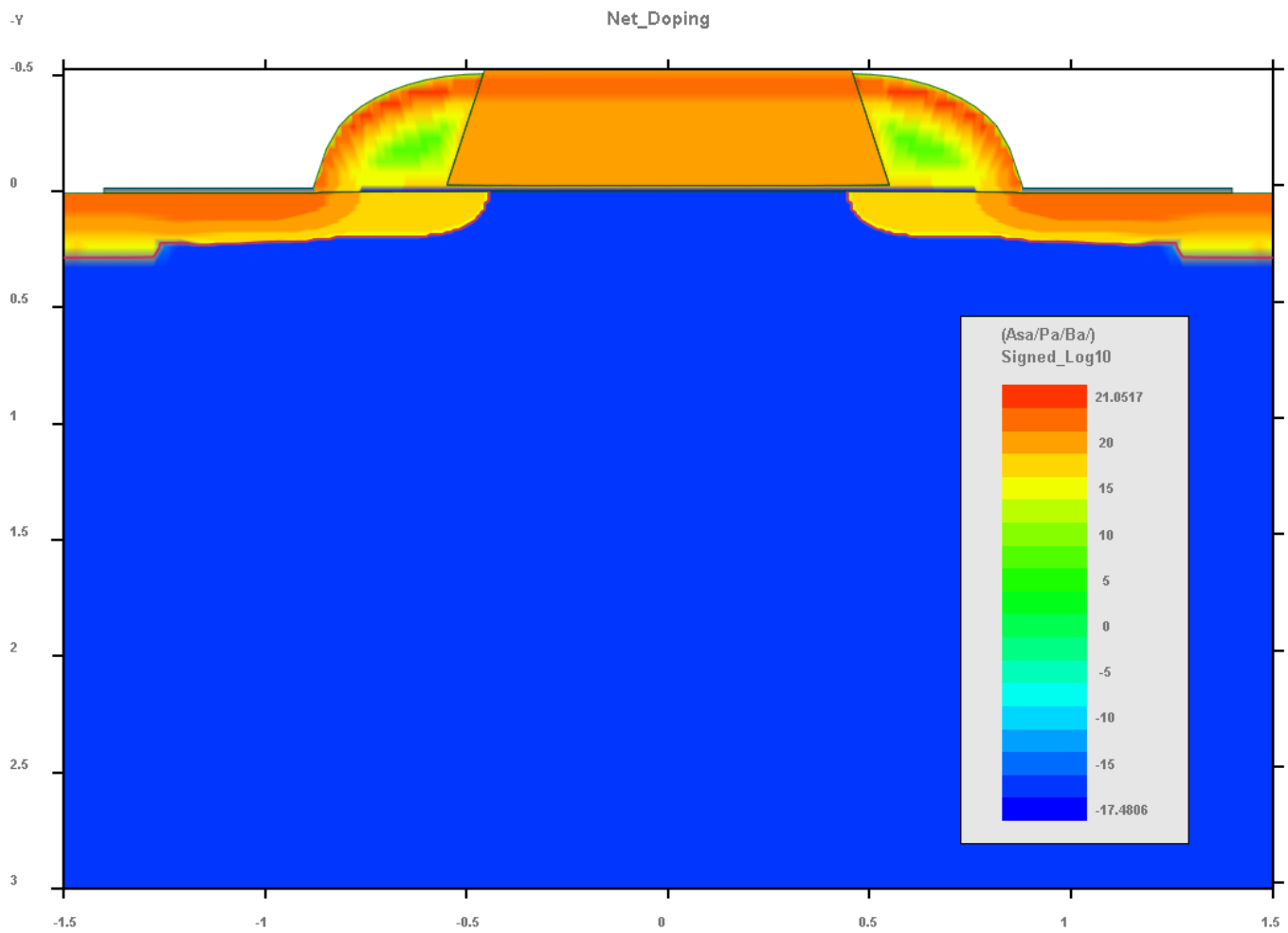

NovaTCAD

Monte-Carlo Simulation with TRIM

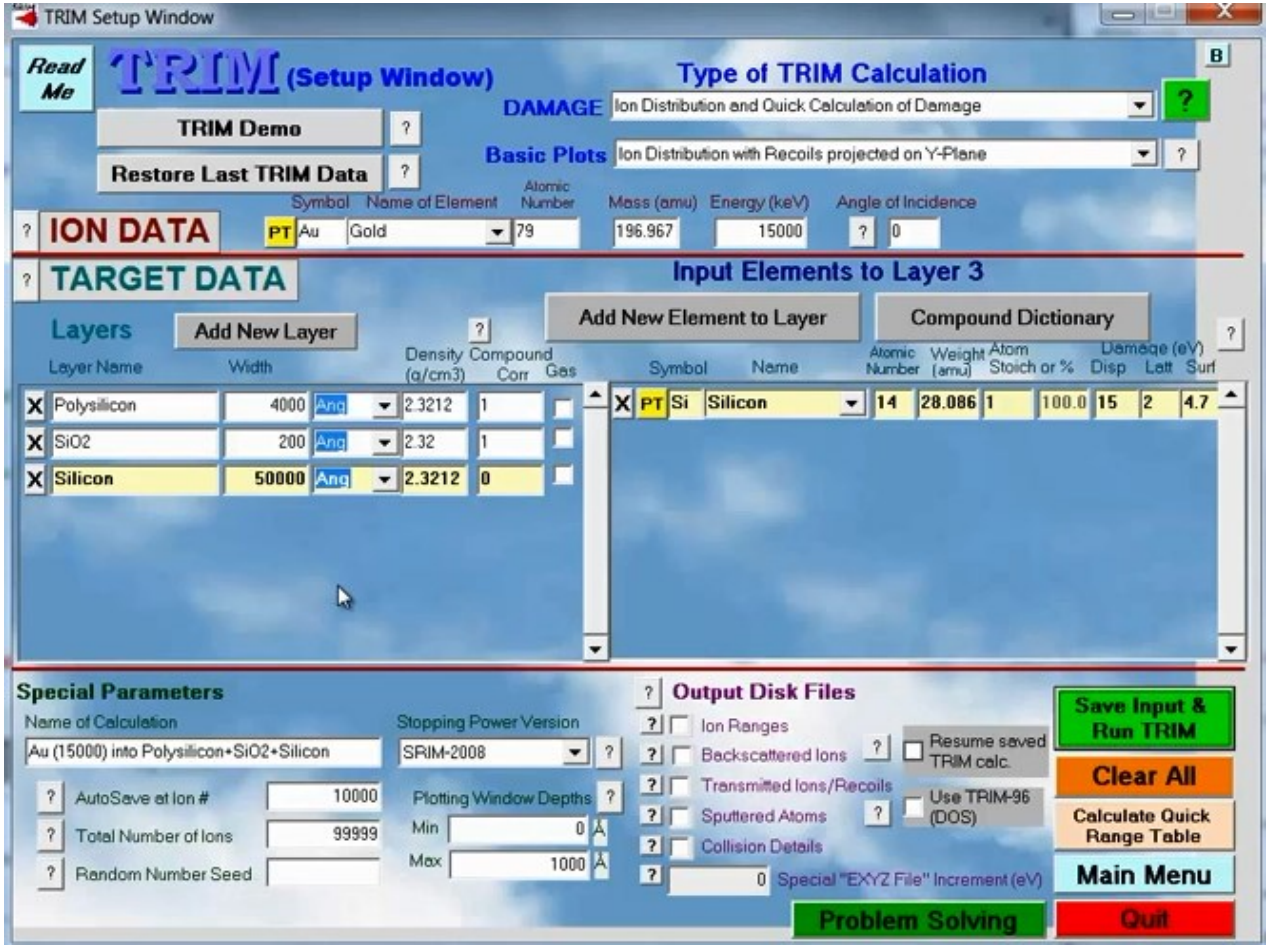

- Monte-Carlo simulation is performed by using TRIM.
- Gold with energy of 1.6 MeV is used to penetrate through Polysilicon/SiO2/Silicon layers

This software can be found at www.srim.org

NovaTCAD

The Monte-Carlo Simulation Results

```
$ use $ or # as first character for comment lines
$====== Au (15000) into Poly Silicon+SiO2 - quar =======
$      SRIM-2013.00
$========================================
$     Ion and Recoil IONIZATION
$ See SRIM Outputs\TDATA.txt for details
$========================================
$-----------------------------------------------------------------
$   Recoil/Damage Calculations made with Kinchin-Pease Estimates
$-----------------------------------------------------------------
$ See file :  SRIM Outputs\TDATA.txt   for calculation data
$ Ion    = Au   Energy = 15000 keV
$============= TARGET MATERIAL ======================================
$Layer 1 : Poly Silicon
$Layer Width = 40000.E-01 A ;
$  Layer # 1- Density = 4.976E22 atoms/cm3 = 2.321 g/cm3
$  Layer # 1- Si = 100  Atomic Percent = 100  Mass Percent
$Layer 2 : SiO2 - quartz (ICRU-245)
$Layer Width = 20000.E-02 A ;
$  Layer # 2- Density = 6.975E22 atoms/cm3 = 2.32 g/cm3
$  Layer # 2-  O = 66.6 Atomic Percent = 53.2 Mass Percent
$  Layer # 2- Si = 33.3 Atomic Percent = 46.7 Mass Percent
$Layer 3 : Silicon
$Layer Width = 50000.E+00 A ;
$  Layer # 3- Density = 4.976E22 atoms/cm3 = 2.321 g/cm3
$  Layer # 3- Si = 100  Atomic Percent = 100  Mass Percent
$==================================================================
$ Total Ions calculated =002000.00
$=============================================================
$  Ionization Energy Units are  >>>>  eV /(Angstrom-Ion)  <<<<
$=============================================================
$
$  TARGET      IONIZ.      IONIZ.
$  DEPTH        by          by
$  (Ang)       IONS        RECOILS
$-----------  ------------  ------------
542010.E-03  3195.60E-01  5244.93E-02
108401.E-02  3175.20E-01  5191.39E-02
......
596201.E-02  3049.19E-01  6074.16E-02
542000.E-01  0000.00E+00  0000.00E+00
```

- The simulation results will be saved to a text file named as trim_ioniz.txt
- The file is to be used by APSYS for device simulation

NovaTCAD

APSYS Device Simulation

- Two ion strikes with some time delays in between are defined in the APSYS .sol file.
- Monte Carlo simulation results (trim_ioniz.txt) is used as the input data for the Linear Energy Transfer (LET)

```
$ 1st ion strikes
radiation_heavy_ion let_file=trim_ioniz.txt let_unit=eV/angstrom &&
depth_unit=angstrom layer1_material=Si layer2_material=SiO2 &&
layer3_material=Si &&
lateral_straggle=0.2 location_xz=(0 0) &&
layer1_from_top=0.5 layer2_from_top=0.025 layer3_from_top=10 &&
pulse_fwhm=1.5e-12

$ 2nd ion strikes
radiation_heavy_ion let_file=trim_ioniz.txt let_unit=eV/angstrom &&
depth_unit=angstrom layer1_material=Si layer2_material=SiO2 &&
layer3_material=Si &&
lateral_straggle=0.2 location_xz=(0.2 0) &&
layer1_from_top=0.5 layer2_from_top=0.025 layer3_from_top=10 &&
pulse_fwhm=1.5e-12
```

NovaTCAD

APSYS Device Simulation

- The drain voltage is first scanned to 5V with source/gate terminals grounded
- Light is used to control the radiation generation rate
- A Gaussian function is used to define each pulse. Parameters are defined for the two pulses with the second strike having a 2 picosecond delay
- After the strike, wait for 1 nanosecond to observe the recovery

```
$ scan #3
scan var=time value_to=6.e-12 &&
var2=light  function_label2=gaus_pulse1 &&
var3=light2  function_label3=gaus_pulse2 &&
init_step=0.1e-12 max_step=0.2e-12

scan_function label=gaus_pulse1 type=gaussian &&
gsn_t1=0.  gsn_dt=1.5e-12 gsn_s1=0.  gsn_s2=1.

scan_function label=gaus_pulse2 type=gaussian &&
gsn_t1=2.e-12  gsn_dt=1.5e-12 gsn_s1=0.  gsn_s2=1.

$ scan #4
scan var=time value_to=1000.e-12 &&
init_step=0.1e-12 max_step=50.e-12 min_step=0.001e-12 &&
var2=light  value2_to=0.0  &&
var3=light2  value3_to=0.
```

NovaTCAD

Heavy-ion Radiation Summary

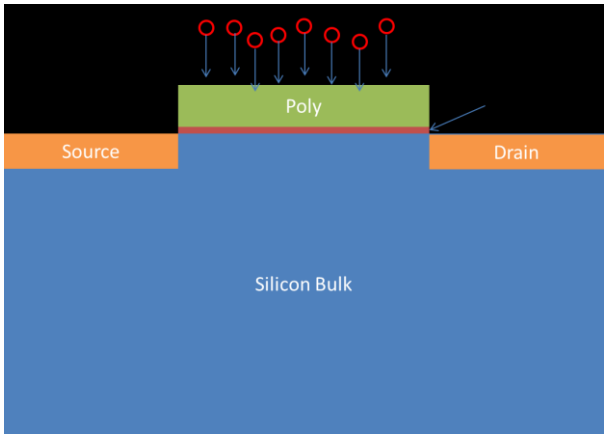

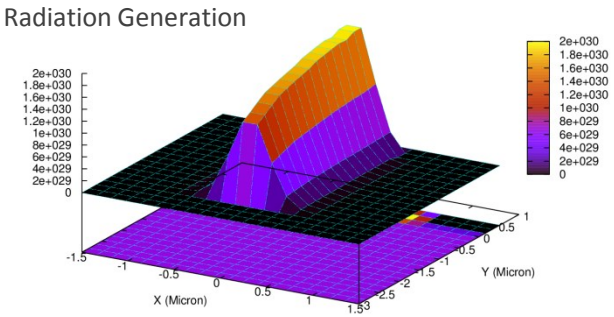

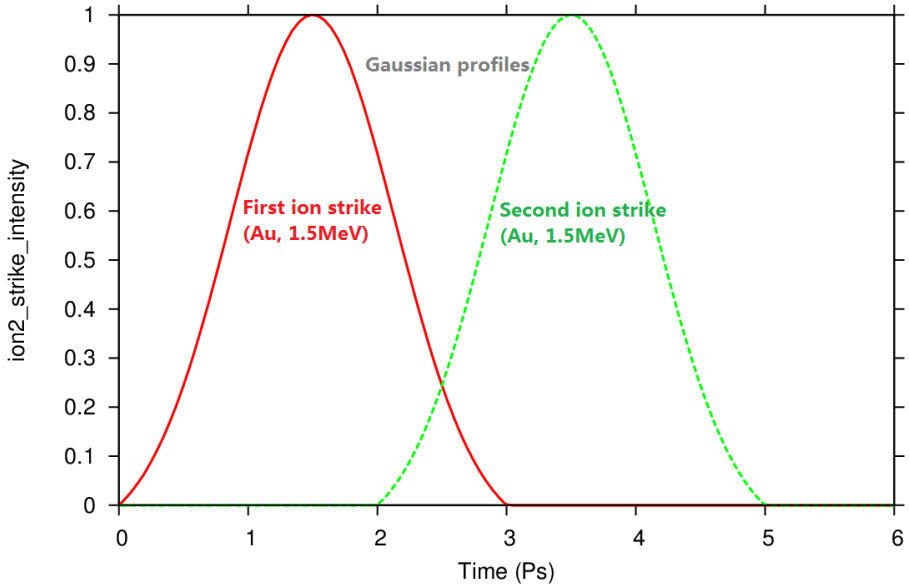

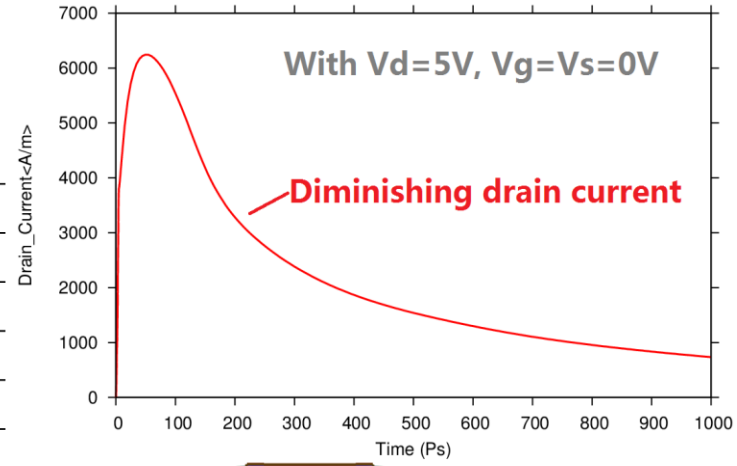

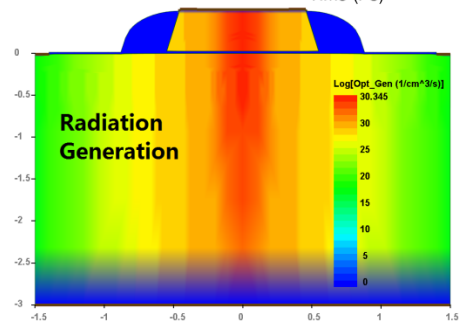

NovaTCAD

Crosslight Customer Locations

Over 300 customers located around the world

NovaTCAD

CROSSLIGHT

A Canadian company with 20 years of history

The world's first commercial TCAD for laser diode

The world's No.1 provider of optics and photonics TCAD

The world's most advanced stacked planes 3D TCAD

NovaTCAD